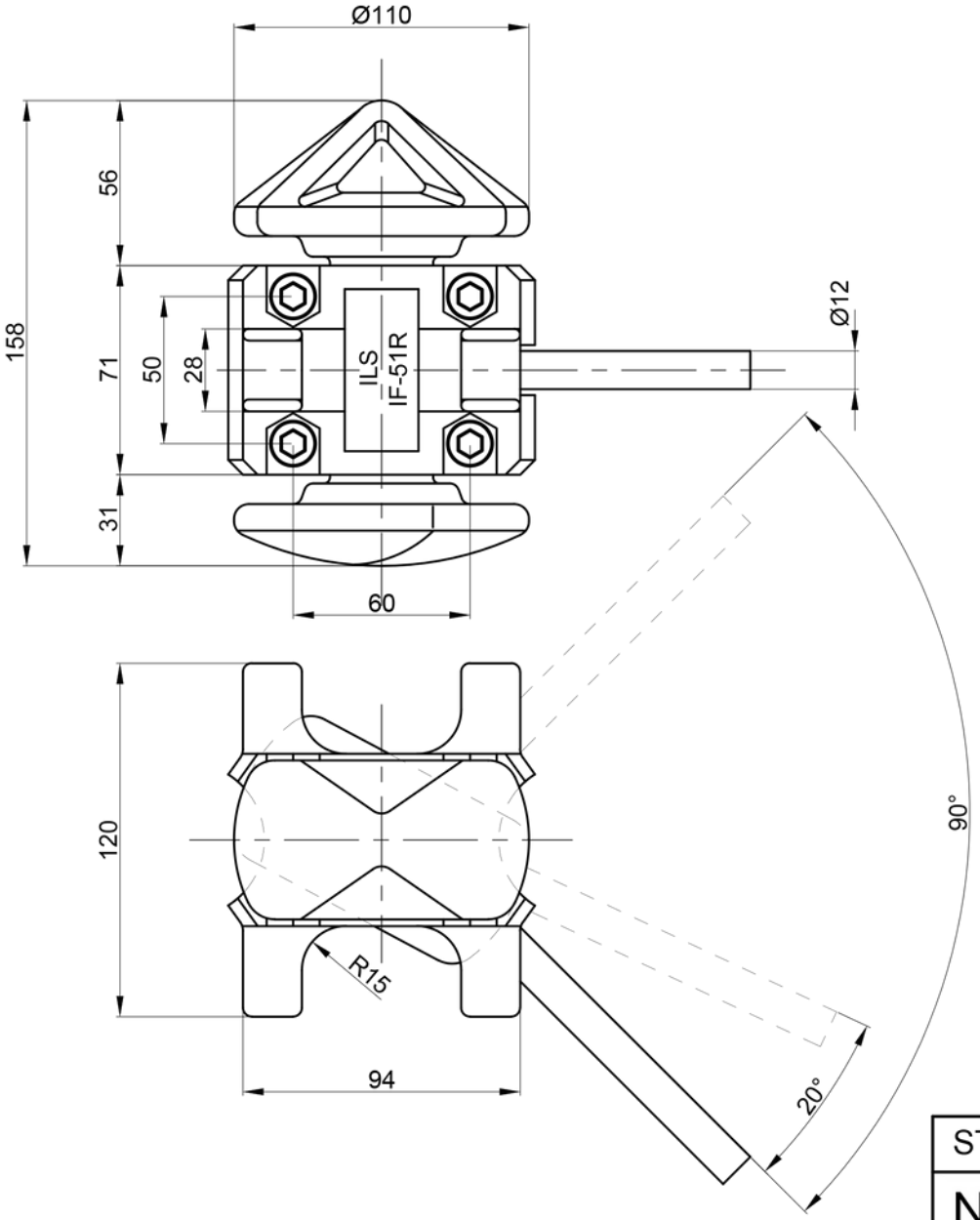

LOADS		SHEAR[kN]	TENSION[kN]
BREAKING LOAD	BL	420	500
PROOF LOAD	PL	263	313
SAFE WORKING LOAD	SWL	210	250

TOTAL WEIGHT: 4,8 kg

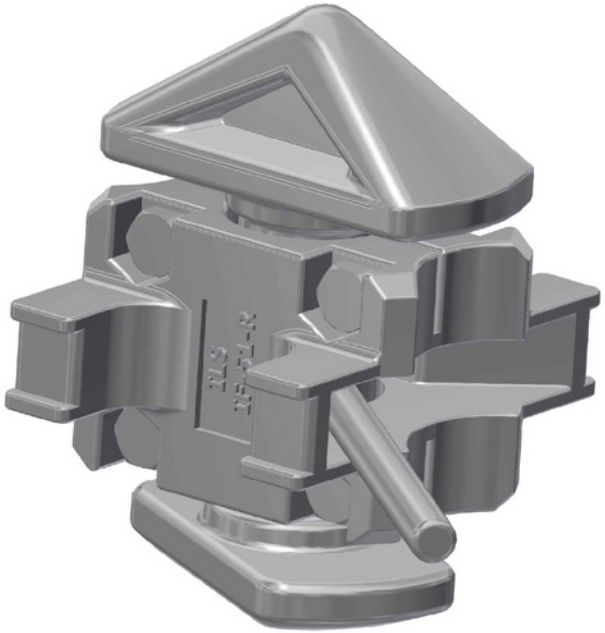

STANDARD INTERMEDIATE TWISTLOCK | IF-51-R

NAVACQS SEAL SUPPLIERS B.V.

Albert Plesmanweg 107 A
3088 GC Rotterdam
Nederland

+31(0)10-495 0000
sales@navacqs.nl
sales@navacqs.be